REVISION HISTORY

89 / : KQOX_WLO PY ZO SY_ O SSYX WKc NSPO PYW ZKQOX_WLO SX ROM_ OX O SYX

O SSYX : YN_MSYX

O SSYX ZNK O0SQ_O OWY ODOXO NSYNO

DEVICE ORDER INFORMATION

=- ,		=9 6

1) 0Y KZO OOV+NN=_P5 OQ =- ,

ABSOLUTE MAXIMUM RATINGS

9 O YZOK SXQPOOKS OWZOK _O_XO YROaSOXYON

3 / 8			

PIN CONFIGURATION

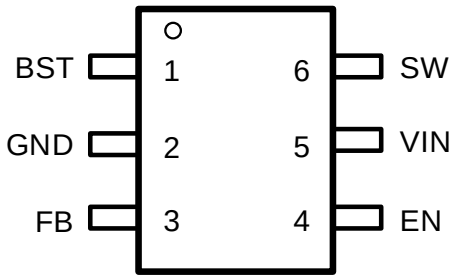

RECOMMENDED OPERATING CONDITIONS

9 O YZOK SXQPOOKS OWZOK _ O KXQO _XO YROa SOXY ON

38	3XZ_ YVKQO KXQO			
9	9 _ Z_ YVKQO KXQO			
4	9 ZOK SXQT_XMSYX OWZOK _ O			-

ESD RATINGS

/=.	2_WKX, YNc 7 YNOV2, 7 ZO +8=34/. /- 4= ZOMBBMK SYX KWZSK			U
	- RK QON. O SMO 7 YNOV-. 7 ZO +8=34/. /- 4= ZOMBBMK SYX KWZSK			U

(1) 4/. /- NYM_WOX 4/: KO RK 2, 7 KWa KRO WKX_RKM_SXQa SRK KXNK N/=. MYX YVZ YMO

ELECTRICAL CHARACTERISTICS

38 4 - h - cZSMKV KVOS O ON _XNO -

38	9 ZOK SXQ SXZ_ YVKQO			
38I 69	3XZ_ 69 R O RYWN 2c OO S	38 SSXQ		W
3.2. 8	=R_NYa XM_ OX PYW 38 ZSX	/ 8 XY WYKN		+
3	_SD MDX M_ OX PYW 38 ZSX	/ 8 PWK SXQ XY WYKN XYX aSMRSXQ		+
. =98I 2	2SQR SNO79=0/ YX O S KXMD	,99 =A		W
/ 0	OPO OXMD YVKQO YP0,			
3837I 2=	2SQR SNO ZYa O 79=0/ ZOKU M_ OX VSWS R O RYWN			+
/ 8I 2	/ XKLVD RSQR R O RYWN			
/ 8I 6	/ XKLVD WYa R O RYWN			
/ 8I 2C=	/ XKLVD R O RYWN Rc OO S			W
38I 6	/ XKLVD ZSX Z_W_ZM_ OX	/ 8		+
38I 2	/ XKLVD ZSX Z_W_ZM_ OX	/ 8		_+
==	=YP K SWO			W
0=A	=aSMRSXQ PO _OXMc			72d
98I 738	7 SXSW_WYX SWO	38		X
9 :	0CCNLKMU Y O YVKQOa SR O ZOM Y OPO OXMD YVKQO	0, /0 SSXQ 0, /0 PK WSXQ		
,99	,99 =A 69 R O RYWN	,99 =A PK WSXQ 2c OO S		W
=.	RO WKV R_NYa X R O RYWN	4 SSXQ 2c OO S		- -

. OSCN PYW LOXMR MRK KMO SIK SYX

TYPICAL CHARACTERISTICS

FUNCTIONAL BLOCK DIAGRAM

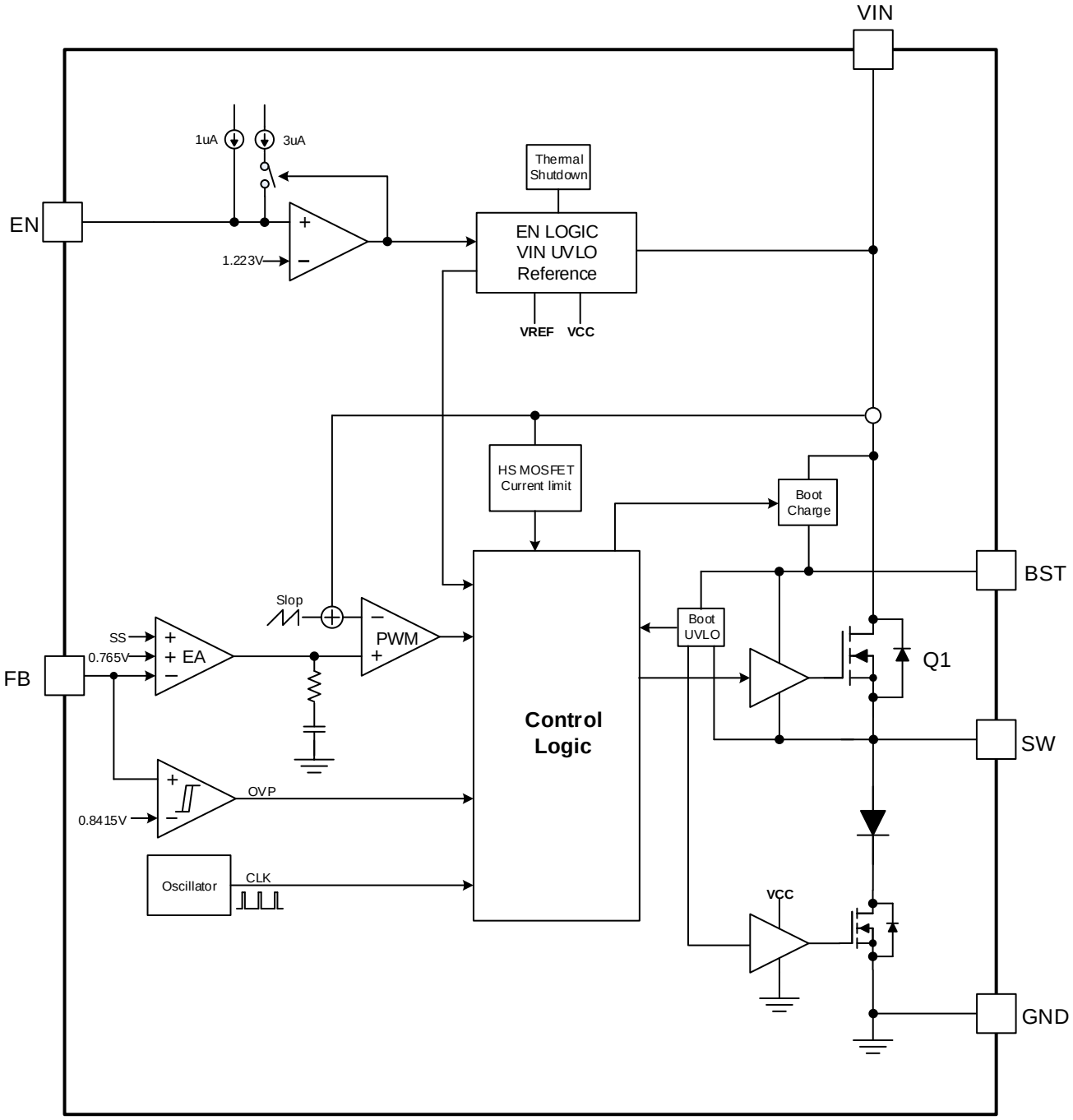

0SQ_O 0_XMSYXKV, YMU. SKQKW

OPERATION

RO =- S K SKZ_ + Y_Z_ L_MUMYX O O aSR SKOQKON W N YX RSQR SNO ZYaO 79=0/ 3 SWZVOWOX MYX KX PO _OXMc ZOKUM_ OX WYNO MYX YV Y OQ_VKO Y_Z_ YVKQO Z Y SNSKQ ObMOWOX VSKOKXN VYKN KX SOX O ZYX O

RO =- POK_O PBCON 72d aSMRSKQ PO _OXMc aRSMR WSKSWSNO RO ObOXKV YPP MRSZ ZK SO MYWZYXOX SNOKXN ON_MO ROY_Z_ SZZVO RO=- POK_O KXSKOXKV W YP K SWO YK YSN VK QO SK_RM_ OX KXN Y_Z_ YVKQO Y O RYY N_SKQ K _Z RONO SMOKVY _ZZY WYXYVSRSM K _ZaSR ZO LSK ON Y_Z_ MYXNSSYX RO OKWVO WYNO KX SSYX LOaOOX: A 7 WYNOKXN: =7 WYNOYZOKSYX OX _O RSQR OPPSMSDXMc Y O aSNO VYKN M_ OX KXQO RO _SD MOX M_ OX S cZSMKVc _+ _XNO XY VYKN Y VOOZ WYNO MYXNSSYX YKMRSD ORSQR OPPSMSDXMc K VSQR VYKN

RO=- RK KNOPK_VSKZ_ K _Z YVKQOYP aSR W Rc OOS RO/8 ZSKSKRSQR YVKQOZSK aSRKZOMSSYX RO RYN RK MKXLO_ ON YKNT_ ROSKZ_ YVKQOVMUY_ RO RYN aSR aYObOXKVOSY YWOO KMM_KORSQRO 69 c OW O _SOWOX 0VK SKQ/8 ZSKOXKLVO RONO SMOaSR ROSKOXKVZ_W_Z M_ OX Y ROZSK - YXXOMSKQ/8 ZSK Y 3B NSOMVc K _Z RONO SMOK_YVK SMKVc

RO=- P_WZ YOMSYXPOK_O SXMV/NO ROSKZ_ _XNO YVKQOVMUY_ ROY_Z_ Y O YVKQOZ YOMSYX Y O M_ OX ZYOMSYXaSR McMVO Lc McMVO M_ OX VSVSSKQ Y_Z_ RK N RY ZYOMSYXKXN RO WKV R_NYaX ZYOMSYX

RO =- OWZVYc PBCON PO _OXMc ZOKUM_ OX WYNO MYX YV+X SKOXKVMXMU SKSBKO _XSKQ YX RO SKOQKON RSQR SNOZYaO 79=0/ SKOKMR McMVO ROX SXN_MY M_ OX SO VSKOK Vc A ROX ROM_ OX R Y_QR RSQR SNO 79=0/ OKMRO RO R O RYN VO OV O Lc RO-97: YVKQOYP ROSKOXKVO Y KWZVSSD ROSKOQKON RSQR SNO 79=0/ S _XON YPP

ROO Y KWZVSSD O O RO-97: XYNOLcMYWZK SKQ RO YVKQOYP RO0, ZSKaSRKXSKOXKV OPOOXMO YVKQO A ROX RO VYKN M_ OX SXMOCK O K ON_MSYX SK ROPOONLKMU YVKQO OVK SO Y RO OPOOXMO KSO -97: YVKQO SW ROK OKQOSXN_MY M_ OX WKMRO RO SXMOCK ON VYKN M_ OX RS POONLKMU VYYZaOW OQ_VKO RO Y_Z_ YVKQO Y RO OPOOXMOWXM 7: RK WYXH MSW YXaROXN_ScOMCMKO RKX PY K PBCON PO _OXMc ZOKUM_ OX WYNO MYX YV

RO=- YZOKO SX: _VO=USZZSKQ7 YNO VSQR VYKN M_ OX SWZ Y OOPPSMSDXMcPOON A ROX RO VYK M_ OX NOMOCK O KX SXMOWOX SK ROPOONLKMU YVKQO VOKN

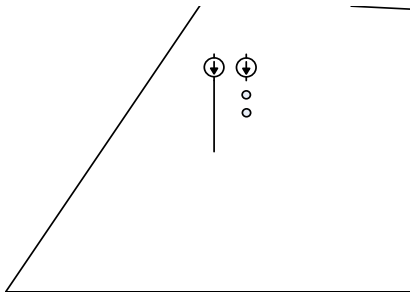

0SQ_O =c OW 69 Lc OXKLVONSSNO

aROO

- SO S SSKQ R O RYWNYP SK 69
- PKW S PKVWSKQ R O RYWNYP SK 69

RO =- OQ_VK O RO SK O XKV OPO OXMD YVKQO K aSR ±2.5 YVOKXMD Y O RO YZOK SKQ OWZOK _ OKXN YVKQO KXQO ROY_Z_ YVKQO S O Lc K O S Y NSSNO PYW ROY_Z_ XYNO Y RO0, ZSK 3 S OMYWWOXNON Y_O YVOKXMD Y LO O O S Y O/ _K SYX YMKWM_VK O O S KXMD YP O S Y NSSNO Y SWZ Y O OPPSMDXMc K VSQR VYKN VK QO KV_O O S Y K O OMYWWOXNON 2YaO O SP RO KV_O K O YY RSQR RO OQ_VK Y aSWLO WY O _ MDZ SLVO Y XYSOKPPOMSKQ Y_Z_ YVKQO KMM_KMc

aROO

- 0,I 9: S RO O S Y MYXXOMSKQ ROY_Z_ Y RO0, ZSK
- 0,I,9 S RO O S Y MYXXOMSKQ RO0, ZSK Y ROQ Y_XN

RO =- SK OQ K O KX SK O XKV YP K MSM_S RK KWZ RO OPO OXMD YVKQO PYW dO Y YV Y OPO OXMD YVKQO SK W JP RO/8 ZSK S Z_VON LOYa aSMRSKQ YZ KXN RO SK O XKV YP K O O RO YP K KVY O O N_SKQ R_NYa XN_O Y RO WKVY O YKNSKQ

+XOb O XKVLYY KZMKZKMSY LOaOOX, 99 ZSK KXN=A ZSK ZYaO RO PYK SKQ QK ON SO Y RSQR SNO ZYaO 79=0/ RO LYY KZMKZKMSY YVKQO S MRK QON PYW KX SK OQ K ON YVKQO OQ_VK Y aROX RSQR SNO ZYaO 79=0/ S YPPKXN RO Ob O XKVVYa SNO NSYNO MYXN_M RO OMYWWOXNON KV_O YP RO, 99 MKZKMSY S 0

RO 69 YP RSQR SNO 79=0/ QK ON SO RK SSKQ R O RYWNYP KXN Rc O O S YP W A ROX RO NO SNO YZOK O aSR RSQR N_c McMO Y Ob OWOVc VSQR VYKN LYY KZMKZKMSY WKc LO XY OMRK QON SK MYX SNO KLVO YXQ SWO RO YVKQO K LYY KZMKZKMSY S SK _PPSMSOX YN SO RSQR SNO 79=0/ P_VcYX A ROX RO YVKQO KMY LYY KZMKZKMSY N YZ LOYa , 99 69 YMM_ RO SMYX O O PY MD _XSKQ YSK KX SK OQ K ON VYa SNO 79=0/ ZO SYNSMKVc Y OPO R RO YVKQO YP LYY KZMKZKMSY YQ_K KX OO RO MYX O O YZOK SYX Y O K a SNON_c KXQO

. _SKQ RO MYXN SSYX YP_VK VYa YVKQO NSPO OXMD PYW RO SKZ_ Y RO Y_Z_ =- YZOK O SK6Ya . YZ

APPLICATION INFORMATION

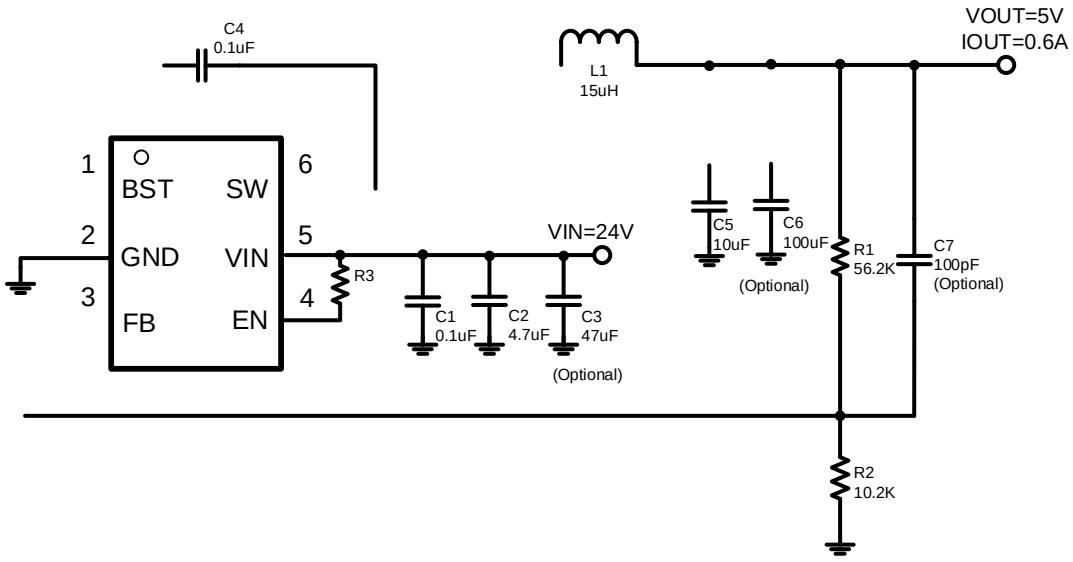

0SQ_O =- .OSQX/bKWZYO 9_Z_aSR: YQKWWKLYO 69

3XZ_ YVKQO	8YWKV
9_Z_ YVKQO	
7KbSW_W9_Z_-_OX	+
=aSVRSXQ0O_OXVc	72d
9_Z_ YVKQO SZZYO ZOKU YZOKU	W
KXSQX OZYXO + Y + VYKN OZ	Y_ W
=K 3XZ_ YVKQO SSXQ 3B	
=YZ3XZ_ YVKQO PKVSXQ 3B	

RO Y_ Z_ YVKQO S O Lc KX Ob O XKV O S Y NSSNO
KXN SK cZSMKV KZZVSMK SYX MROWK SM
OMYWWOXNON O S KXMO S 5 OO _K SYX
YMKWM_VK O

	5	5
	5	5

aROO

- /0 S ROPOONLKMU OPO OXMO YVKQO cZSMKV

A ROO

- 67 38 S ROWSKSW_W SKN_MKXMD O _SON
- Pa S RO a SMRSKQPO _OXMc
- 9 S ROY_Z_ YVKQO
- 38 WKb S ROWKbSW_W SKZ_ YVKQO
- 39 WKb S ROWKbSW_W. - WKNM_ OX
- 63 S MYOPPSMSOX YP36: : Y39

RO YKVM_ OX PWa SKQ R Y_QR ROSKN_MY S ROSKN_MY SZZVOM_ OX ZV_ ROY_Z_ M_ OX A ROX OVOMSKQ KX SKN_MY MRYY O S K ON M_ OX O ZOMBKWc RO K _K SYX M_ OX WKQO RKX S ZOKU YZO K SYX M_ OX KXN 7 = M_ OX KVY XY LO ObMDONON ROOPY O RO ZOKU a SMRSKQ M_ OX YP SKN_MY 36: /+5 KXN 36 7 = MKX LO MKWM_WK ON K SKO _K SYX KXN O _K SYX

A ROO

- 36: /+5 S ROSKN_MY ZOKU M_ OX
- 39 S RO. - WKNM_ OX
- 36: : S ROSKN_MY ZOKU Y ZOKU M_ OX
- 36 7 = S ROSKN_MY 7 = M_ OX

3X Y O WKNSKQ Y WKN KX SOX MYXNSSYX ROSKN_MY ZOKU M_ OX MKX SKMOK O _Z Y RO a SMR M_ OX WSWS YP RONO SMDa RSMR S cZSMKWc + ROWY MYX O K SOKZZ YKMR S YMRYY OKX SKN_MY a SR K K _K SYX M_ OX K SKQ QOK O RKX + , OMK_ O YP RO WKbSW_W 36: /+5 WSWSON Lc NO SMD RO WKbSW_W Y_Z_ M_ OX RK RO =- MKX NOVSO KVY NOZOXN YX ROSKN_MY M_ OX SZZVO R_ ROWKbSW_W NO SON Y_Z_ M_ OX KVY KPPOM RO OVOMSYX YP SKN_MKXMD RO WKWO SKN_MY O _V SK WKQO SKN_MY M_ OX SZZVO VOKNSKQ Y K WaO WKbSW_W Y_Z_ M_ OX

RO =- O _SO KX Ob O XKVMK MR NSYNO LOa OOX RO =A ZSK KXN 1 8. RO OVOMON NSYNO W_ RK O K O O O YVKQO K SKQO _KVY Y QOK O RKX 38 WKb RO ZOKU M_ OX K SKQ YP RONSYNO W_ LOQOK O RKX RO WKbSW_W SKN_MY M_ OX =MRY Uc NSYNO K O cZSMKWc K QYYN MRYSMD PY RO MK MR NSYNO N_O Y ROS Wa PY a K N YVKQO RO Wa O ROPY a K N YVKQO YP RONSYNO RO RSQRO RO OPPSMSOXMc YP RO OQ_WK Y

cZSMKWc NSYNO a SR RSQRO YVKQO KXN M_ OX K SKQ RK O RSQRO PY a K N YVKQO + NSYNO a SR K WSKSW_W YP O O O YVKQO S Z OPO ON Y KWa SKZ_ YVKQO KX SOX _Z Y RO K ON YVKQO YP RO =-

0Y ROObKWZVONO SQX RO, + 0 =MRY Uc NSYNO S OVOMON PY S Wa O PY a K N YVKQO KXN QYYN RO WKV MRK KMO S SM MYWZK ON Y WKWO NO SMD RO cZSMKVPY a K N YVKQO YP RO, + 0 S YV K +

RONSYNO W_ KVY LO OVOMON a SR KX KZZ YZ SK O ZYa O K SKQ RONSYNO MYXN_M ROY_Z_ M_ OX N_ SKQ RO YPP SWO YP RO SK O XKVZYa O a SMR RO YPP SWO YP RO SK O XKV a SMR S K P_XMSYX YP RO WKbSW_W SKZ_ YVKQO ROY_Z_ YVKQO KXN RO a SMRSKQPO _OXMc ROY_Z_ M_ OX N_ SKQ RO YPP SWO S W_VSZVSON Lc RO PY a K N YVKQO YP RONSYNO Y MKWM_WK O RO SK KX KXOY_ MYXN_MSYX W O YP RONSYNO + RSQRO a SMRSKQ PO _OXMSO RO KM W O YP RONSYNO XOON Y LO KUOX SK Y KMMY_X RO KM W O YP RONSYNO K ON_O Y RO MRK QSKQ KXN NS MRK QSKQ YP ROT_XMSYX MKZKMSK XMD KXN O O O OMY O c MRK QO / _K SYX S _ ON Y MKWM_WK O RO Y KVZYa O NS SZK SYX SKMV_NSKQ MYXN_MSYX W O KXN KM W O YP RONSYNO

MKZKMSY \SLO MDKWSM MKZKMSY 0Y MDKWSM MKZKMSY RO MKZKMSKXMD NYWSKO RO Y_Z_ SZZVD 0Y
SVZVSSKSYX RO Y_Z_ YVKQO SZZVDMKXLOO SVKONLc / _KSYX NO SON

A ROO

- S ROY_Z_ YVKQO SZZVD
- P=A S RO aSVRSXQPO _OXMc
- 6S ROSXN_MKXMDYPSXN_MY
- -9 S ROY_Z_ MKZKMSKXMD
- 9 S ROY_Z_ YVKQO
- 38 S ROSXZ_ YVKQO

. _O YMKZKMSY NOQKNSXQ_XNO . - LSX RO LSX YVKQOMKX SQXSSMKXVc ON_MDMKZKMSKXMD - OKWSM
MKZKMSY MKXVY OWY YP ROSMKZKMSKXMDK KON YVKQO RO CPY O YZK OWK QSXYX RO YVKQO KSXQ Y
OX _OKNO _KOCPPOMSOMKZKMSKXMD cZSMKVc YXO 0MDKWSMY_Z_ MKZKMSY aYUPY WY KZZVSMKSYX

SX Y_ _XW YROaSOXYON

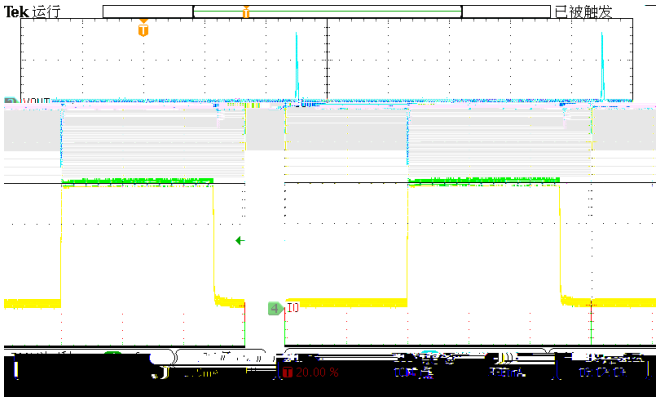

0SQ_O 6YKN KX SDX + + + _

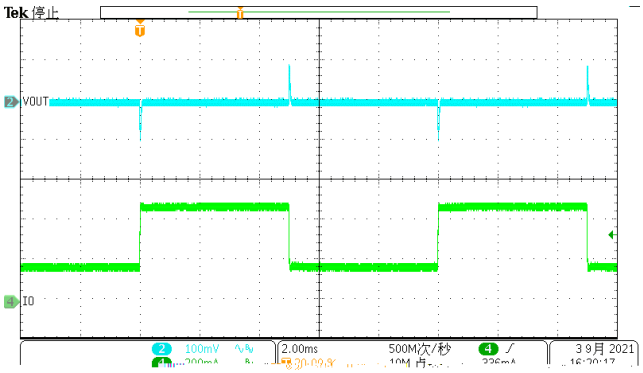

0SQ_O 6YKN KX SDX + + + _

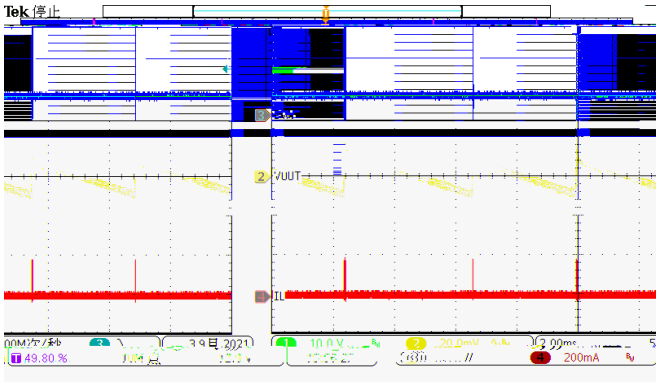

0SQ_O 9_Z_ SZZW 3YKN +

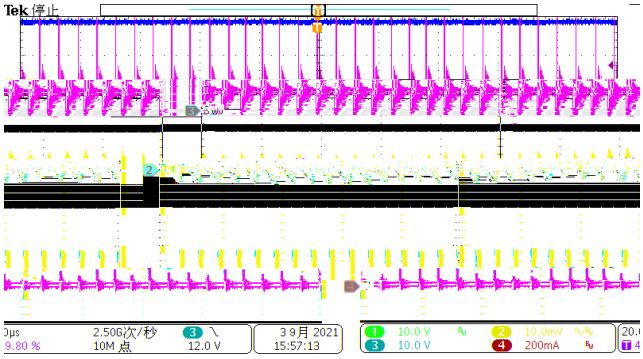

0SQ_O 9_Z_ SZZW 3YKN W+

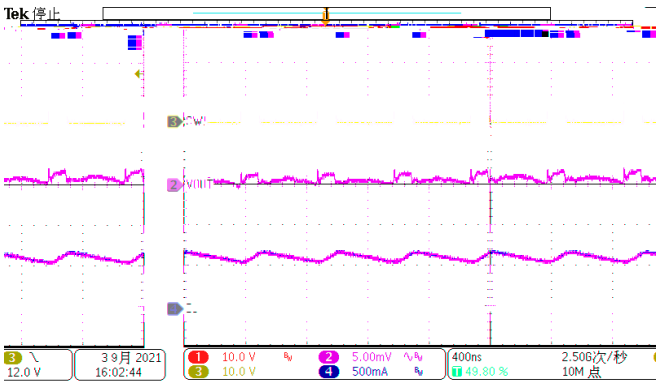

0SQ_O 9_Z_ SZZW 3YKN +

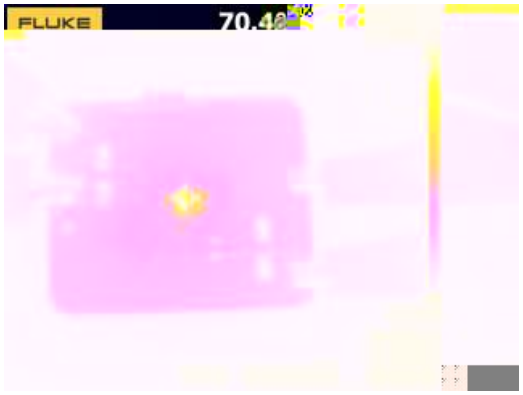

0SQ_O ROWKV 3B Y_ +

RO OQ_YK Y MY_YN _PPO PYW SX KLSXc KXN XYSO Z YLYOW aSRY_ MK OP_Vc YKcY_ YP: - , KNSK SYX YP RSQR PO _OXMc XYSO SXN_MD /73 YZ YZO YKcY_ YP RO RSQR PO _OXMc aSMRSXQ ZK R S O OX SKV

1. 7SXSYSNO RO YOXQ R KXN K OK YPKW KMD MY XXOMON Y RO=A ZSX KXN KYaKc _ OK Q Y_XN ZYKXO _XNO RO aSMRSXQ OQ_YK Y YWSXSYSNO MY_ZYSXQ
2. RO SXZ_ MKZKMSY XOON YLO OcMY O Y RO 3B ZSX KXN 1 8. ZSX Y ON_MD RO SXZ_ _ZZVc SZZVO : YKMD K Ya /= MD K WSYMKZKMSY K MY O Y 3B ZSX KXN RO Q Y_XN K ZY SLVD Y ON_MD ZK K SSMOPPOM
3. 9 _Z_ SXN_MY RY_YN LO ZYKMON MY O Y RO=A ZSX RO K OK YP RO: - , MYXN_MY WSXSYSNO N Y Z O OX ObMD SO MKZKMSSO MY_ZYSXQ
4. 69 KNT_ KXN O S Y YYZ MYWZOX K SYX KXN POON LKMU MYWZYXOX RY_YN MYXXOM Y WK W SQXKV Q Y_XN aRSMR W_ O_X Y RO 1 8. ZSXa SRY_ KXc SX O VOK SXQ aSR ZYa O Q Y_XN
5. Y_O, 9 9 MKZKMSY KMD YX RO Y RO YKcO RKX YZ YKcO Y Z Y SNOa SNO ZK R PY YZ SNO Q Y_XN
6. RO YKcY_ XOON LONYXOa SR a OWMYX SNO K SYX YP RO RO WK V+ YK QO YZ YKcO Q Y_XN ZYK O _ SXQ W_VSZVO RO WK V SK S _ ON Y SYZ Y O RO RO WK VNS SZK SYX ROLY YW YKcO S K YK QO Q Y_XN ZYKXO MYXXOM ON Y RO YZ YKcO Q Y_XN Lc SK

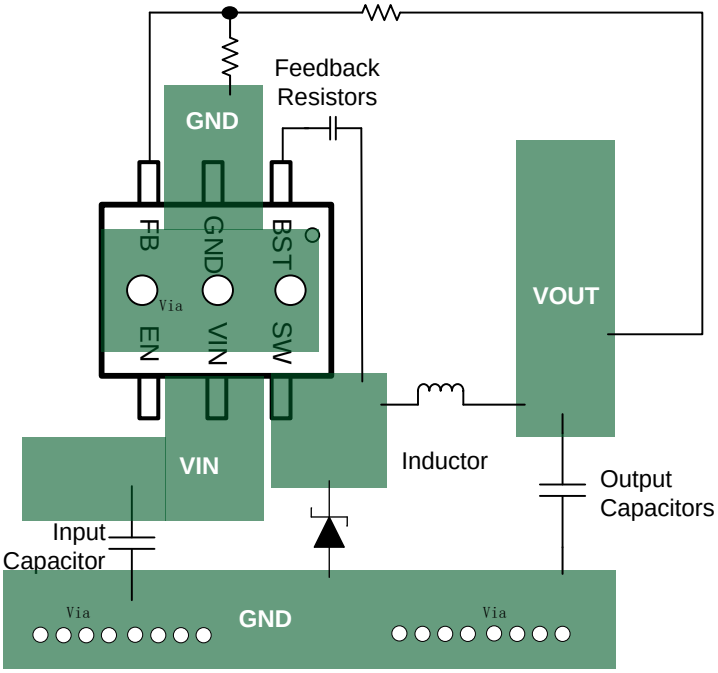

0SQ_O : - , 6KcY_ / bKWZVO

RO WKbSW_W3 T_XMSYX OWZOK _O RY_WILO O SMON Y - _XNO XY WKVYZOK SKQMYXNSSYX - KWI_WK O RO WKbSW_WKWaKLVONS SZK SYX : . WKb KXNUCCZ ROKM_KVZYaO NS SZK SYXVO RKXY O _KVY: . WKb RO WKbSW_WZYaO NS SZK SYX WSWS S NOO WSKON _ SKQ / _K SYX

(14)

a ROO

- + S RO WKbSW_WKWLSDX OWZOK _OPY ROKZZWMK SYX
- 4+ S ROT_XMSYX YKWLSDX RO WKVO S KXMD QSOX SK RO RO WKV3PY WK SYX KLVO

RO OKVT_XMSYX YKWLSDX RO WKVO S KXMD 4+ YP RO ZKMLKQO Q OK Vc NOZOXN YX RO : - , cZO WKcY_ RO WKVZKNMYXXOMSYXKXN OX SYXWOXKVPKMY SKQ RSU: - , MYZZO KXN YWO SKQ RO1 8. YK WK QO Q Y_XN ZWK O OXRKXMD RO RO WKVZOPY WKXMD SKQ WY O SK MYXXOM RO Q Y_XN ZWK O YX RO YZ WKcO KXN LY YW WKcO K Y_XN RO3 aSRY_ YWO WK UKVY OXRKXMD RO RO WKWMKZKLSSc

PACKAGE INFORMATION

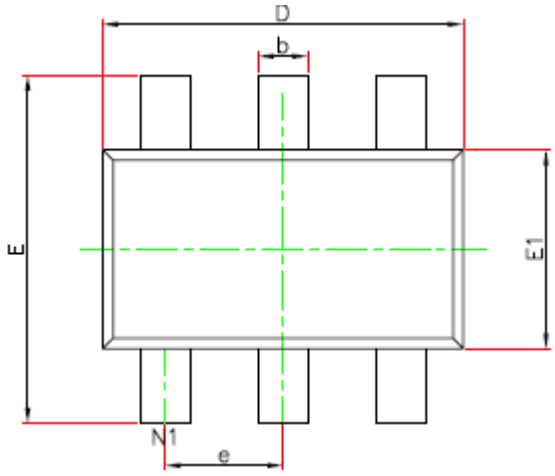

9: 3/A

,9 97 3/A

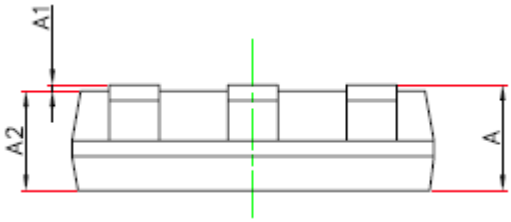

=3 / 3/A

1. . Ka SKQ Z YZY ON Y LO WKNOK 4/ . / - ZKMLKQO Y_ YSKO 7 9 K SK SYX
2. . Ka SKQ XY Y MKVO
3. + WSSKOK NSWOX SYX K O SK WSWSWOO
4. RO WKVZKN RKWLO YWO ON YX ROLYK N
5. . SWOX SYX YPObZY ON ZKN YX LY YW YPZKMLKQO NY XY SKMV_NO WYWPK R
6. - YXKM : - , LYK N PKL SMK SYXPY WSXSW_W YWO WK Ua OL YVO KXMO LOa OOX RO ZSX

+			
+			
+			
.			
/			
/			
L			
M			
O	, =-		
6			
	è		è

TAPE AND REEL INFORMATION